LOCINOX

Let's make better fences together

TIGERDRILL
INSTALLATION INSTRUCTION

PACKAGE CONTENT
1. Tigerdrill
2. Pumadrill
3. Allen Key 3 mm
4. Allen Key 5 mm
5. Drills:
   a. Ø 5 mm – 3/16"
   b. Ø 15 mm – 9/16"
6. 10x Q-Fix expander

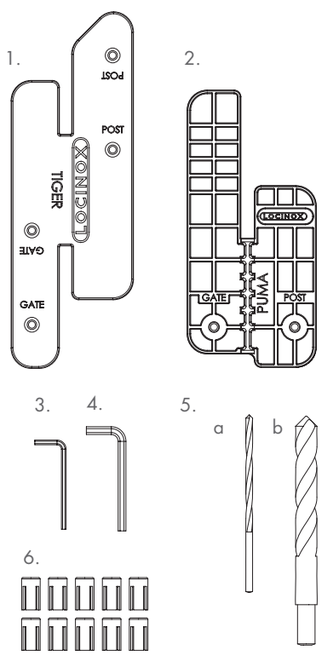

DIMENSIONS

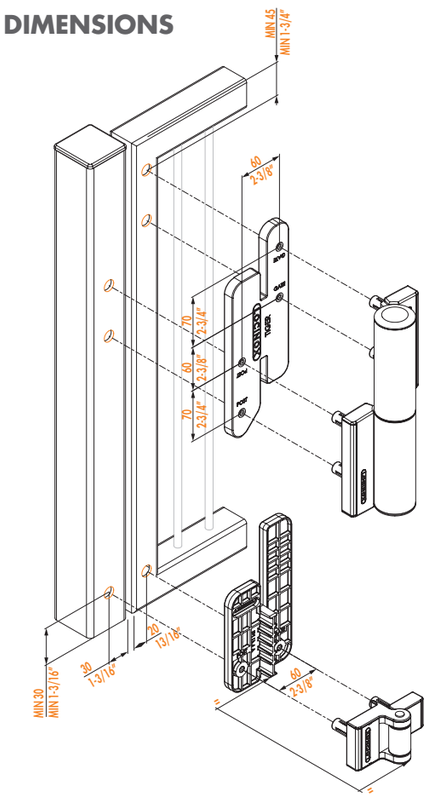

RECOMMENDED TOOLS

Order code:
DRILLVISE 4

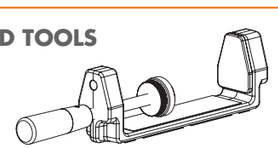

1A. POSITIONING LEFT TURNING GATE

Left opening gate

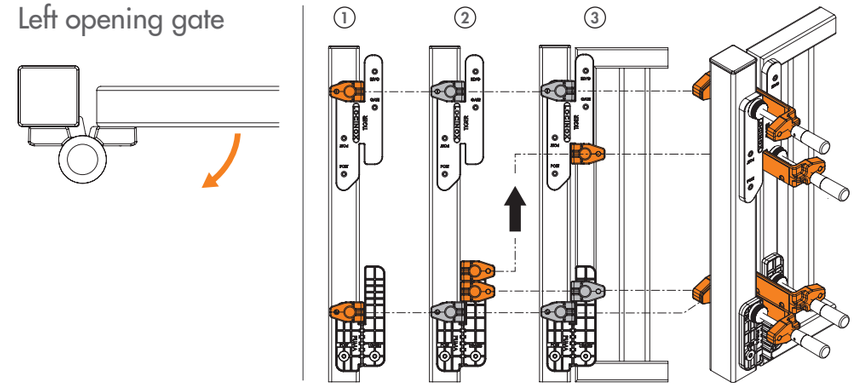

1B. POSITIONING RIGHT TURNING GATE

Right opening gate

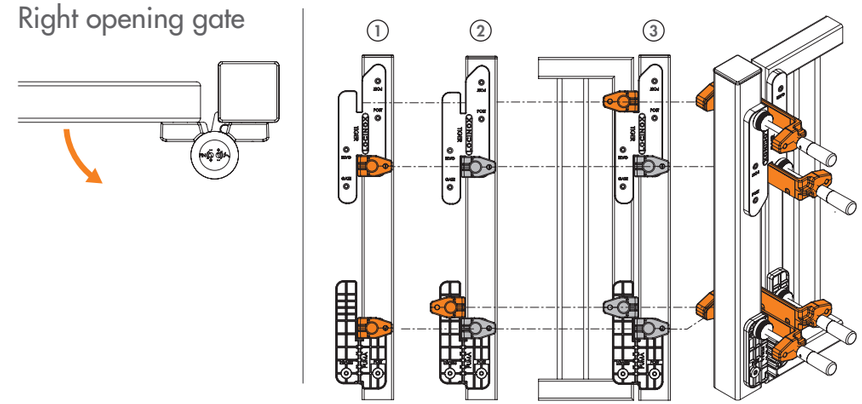

2. DRILLING

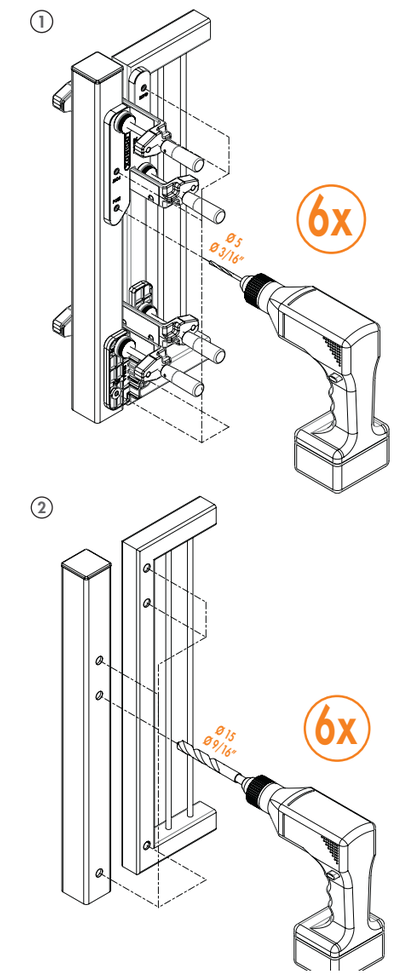

M A N U - 0 0 0 3 7 0 *

Doc. Nr.:
MANU-000370

Locinox nv • Mannebeekstraat 21
B-8790 Waregem • Belgium
Tel. +32 (0)56 77 27 66
E-mail: locinox@locinox.com

Locinox USA LLC • 460-464 Windy Point Drive
Glendale Heights • IL 60139
Tel. 877-LOCINOX • Fax. 708-579-0978
E-mail: salesusa@locinox.com